WSA004 preset alarm angle inclinometer Switch

Product introduction

Woosens WSA004 preset alarm angle inclinometer switch is a cost-effective inclinometer module. it made by high-accuracy accelerometer MEMS device and standard MCU, built-in advanced anti-vibration filtering algorithms. the alarm angle includes four fixed modes, customers can easily select the preset angle by pressing the button. The product has undergone strict production calibration, factory inspection, to ensure excellent product consistency and reliability.

Features

- light indicates the working stats
- ROHS
- 4 modes of preset alarm angles are optional
- Button setting to zero function
- IP65 Protection
- Dual-axis measure, switch signal output

Application

Aerial work platform | Tower crane | Medical devices

Product specification

Electrical Specification

Parameter	Condition	Minimum	Typical	Maximum	Unit
Power supply	Wide voltage	9	12	35	V
Operating current		20		45	mA
Operating temperature		-40		+80	℃
Store temperature		-40		+100	℃

Performance Specification

Parameter	Condition	Specification
Measuring axis		X-Y
Measuring range		±30°
Output resolution		0.01°
Repeatability		0.02°
Frequency response		5Hz
Relative accuracy	±30°Range	0.2°
Weight		160g

Note: The relative accuracy is measured at room temperature 25°C.

Room 502, Building 1, Jiuzhou Industrial Park, No. 10, Tongguan Road,
No.19 Road, Yutang Street, Guangming District, Shenzhen, P. R. China.
TEL:+86-755-83439588
www.woosens.com

Mechanical Characteristic

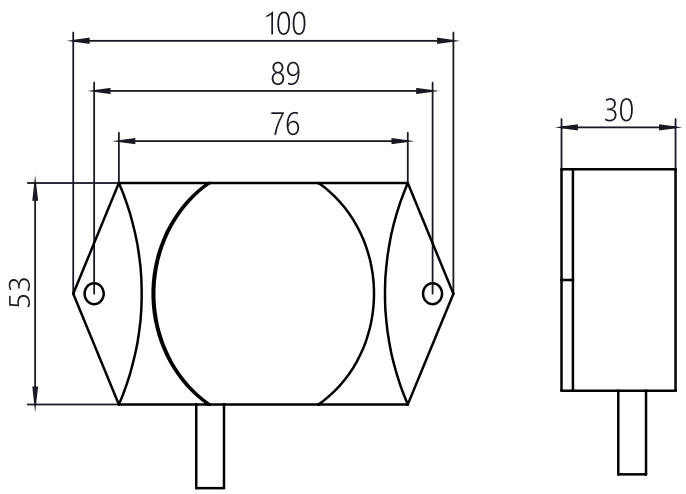

Unit: mm

Installation direction

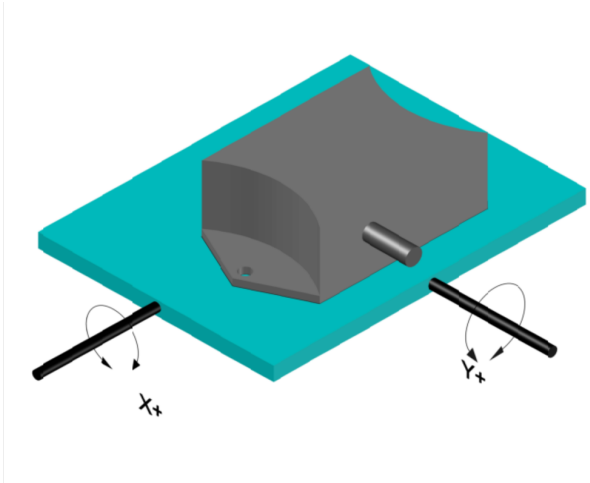

Interface Definition

Interface	1-Red	2-Yellow	3-Black
Function	VIN	X-OUT	GND

Note: Output standard configured connector is DT04-4P.

Preset alarm angle

Modes \ Axis	X	Y
A	2.0°	3.0°
B	1.5°	1.5°
C	1.5°	3.0°
D	2.0°	2.0°

The module defaults to A mode alarm angle setting.

Ordering information

Measuring range	Measuring axis	Part number
±30°	Dual-Axis	WSA004

Setup guide

Alarm angle setting

1. Find the alarm mode switch hole on the left side of the outlet direction.
2. Use the tool to insert the alarm mode switch hole and hold press, at this time, the four alarm angle indicators of A/B/C/D flash at the same time.
3. Keep the four alarm angle indicator lights flashing and observe the status changes of the indicator lights at the same time: the four alarm angle indicator lights flash at the same time and become all on, release the tool. Then use the tool to insert the switch hole to select the appropriate alarm angle mode(select the alarm angle, the corresponding alarm angle indicator light is on), remove the tool after selection, and wait for the four modes of indicator lights to flash and change to the selected alarm angle group indicator light on, the alarm angle setting is completed.
4. Turn off the power.
5. Turn on the power again, and confirm that the indicator of the angle mode just selected is on, indicating that the setting operation is successful. If it does not mean that the setting operation has failed, you need to go back to the first step to perform the setting operation again.

Zero Setting:

1. Find the zeroing hole to the left of the outlet direction.
2. Use the zeroing tool to insert the zeroing hole and hold down the button. You can see the red and green lights flashing alternately (at this time, the zeroing operation can be performed).
3. Keep the red and green lights blinking alternately and observe the indicator light status change: The red and green lights blinking alternately change to steady on at the same time. Release the zeroing tool. Then insert the zeroing tool into the zeroing hole and press it continuously for three times. The red and green light flashes alternately until it turns green and is independently steady on. Then remove the zeroing tool.
4. Turn off the power.
5. Turn on the power again, and confirm that the green light is on, indicating that the zero setting operation is successful. If the red indicator is on, it means that the zero-setting operation has failed, and you need to go back to the first step to perform the zero-setting operation again.

Recommend: Need Zero setting in following situation

1.The sensor has just been installed

2.Compared with the last zero setting, the temperature increased or decreased by more than 15℃

Note: All Specifications are subjected to change without notice.

Room 502, Building 1, Jiuzhou Industrial Park, No. 10, Tongguan Road,
No.19 Road, Yutang Street, Guangming District, Shenzhen, P. R. China.
TEL:+86-755-83439588
www.woosens.com